TR-JB07/WM03-D-IN 3-inch Fixed Dome Wall Mount

Specifications

Bracket	TR-JB07/WM03-D-IN
Application	wall installation for 3-inch fixed dome(Extra back outlet)
Dimensions	126mmx126mmx233mm (5” x5” x9.2”)
Weight	1.0kg(2.2lb)
Material	Aluminum alloy

Dimensions

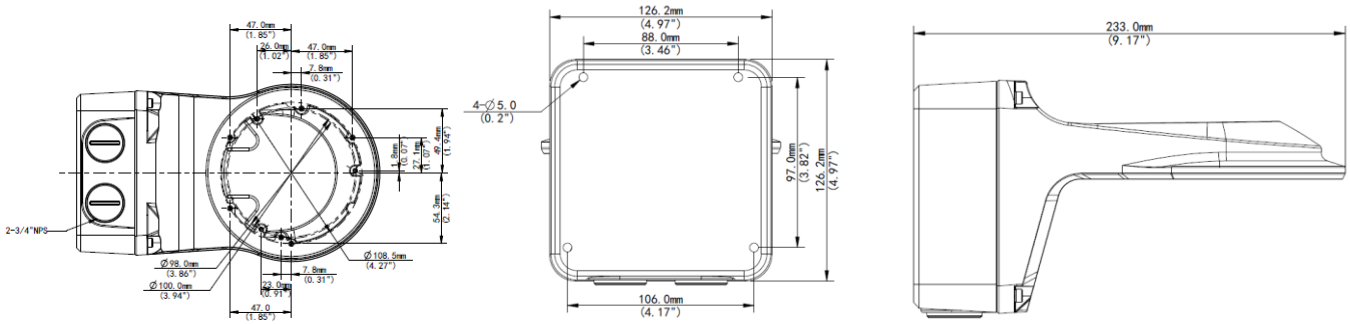

Zhejiang Uniview Technologies Co.,Ltd.

South Tower, Building 10, Wanlun Science Park, 88 Jiangling Road, Hangzhou, P.R.China 310051

Email：overseasbusiness@uniview.com;globalsupport@uniview.com

http://www.uniview.com

©2015 Zhejiang Uniview Technologies Co.,Ltd. All rights reserved.

*Product specifications and availability are subject to change without notice.